STRUCTURE AND INTERMOLECULAR INTERACTIONS IN SELECTED BINARY SOLUTIONS STUDIED BY X-RAY METHODS

H. Drozdowski, A. Romaniuk, and Z. Błaszczak

Department of Optics, Faculty of Physics A. Mickiewicz University, ul. Umultowska 85, 61–614 Poznań, Poland

Keywords: binary solution, intermolecular interactions, X-ray diffraction in liquid solutions

* *e-mail*: riemann@amu.edu.pl

X-ray structural results for liquid ortho-nitrotoluene and *ortho*-nitrotoluene $C_7H_7NO_2$ in 1, 4-dimethylbenzene are reported. The measurements were performed using the transmission technique (Figure 1).

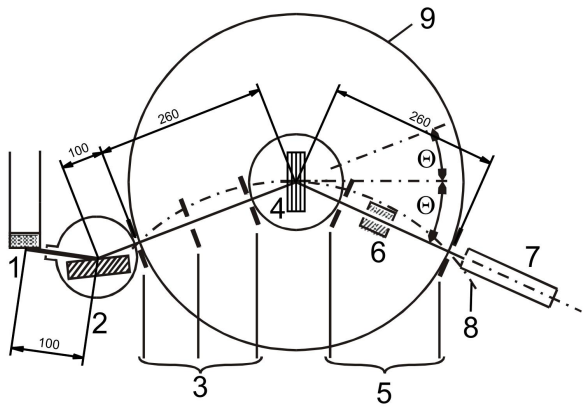

Figure 1: The focusing of the beam passing through the monochromator and goniometer with the preparation studied: 1 – X-ray lamp anode, 2 – monochromator, 3 – a system of input slits of the goniometer, 4 – cuvette with the liquid solution studied, 5 – a system of output slits, 6 – Soller slits, 7 – radiation counter, 8 – Rowland circle, 9 – goniometer circle; distances expressed in mm [1].

Averaged scattered X-ray angular distribution for 10% solution of *ortho*-nitrotoluene in 1, 4-dimethylbenzene was determined (Figure 2).

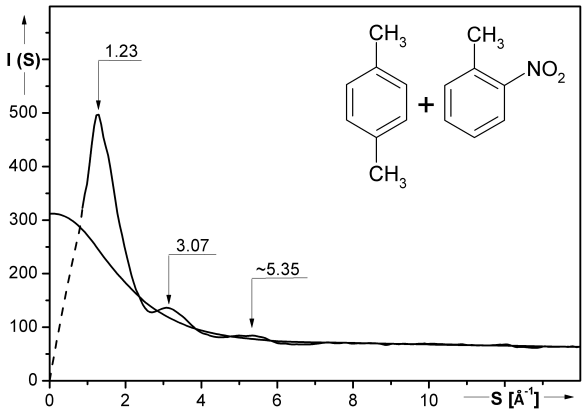

Figure 2: The mean angular distribution of the scattered radiation intensity for binary solution studied.

Radial electron density distribution function was obtained from a modiefied Warren, Krutter and Morningsstar equation [2] (Figure 3).

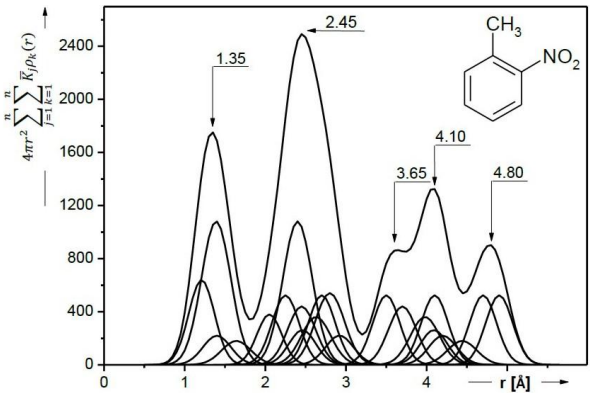

Figure 3: The electron-density radial-distribution function (EDRDF) of the *ortho*-nitrotoluene is a sum of the curves of the Gauss normal distribution.

To the maxima of $I(S)$, EDRDF, interatomic and intermolecular distances are assigned [3]. The experimental results were used to plot models of the most highly probable mutual disposition of the molecules in liquid *ortho*-nitrotoluene and it solution (Figure 4).

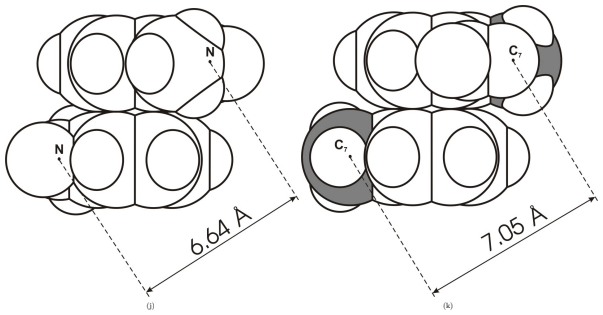

Figure 4: Model of the most highly probable mutual disposition of molecules in 10% solution of *ortho*-nitrotoluene in 1, 4-dimethylbenzene.

References

[1] K. Nowakowski, H. Drozdowski, "X-ray method structural study of liquid cyclohexanol," *Copern. Lett.* **1** (2010) 100 – 105.

[2] H. Drozdowski, K. Nowakowski, Z. Błaszczak, "X-ray diffraction investigation of cyclohexane derivatives at 293 K," *Rad. Phys. Chem.* **80** (2011) 1058 – 1063.

[3] H. Drozdowski, A. Mansfeld, "X-ray analysis of intermolecular interactions in solution of ortho-nitroanisole $C_7H_7NO_3$ in 1,4-dimethylbenzene," *Phys. Chem. Liq.* **46** (2008) 255 – 262.